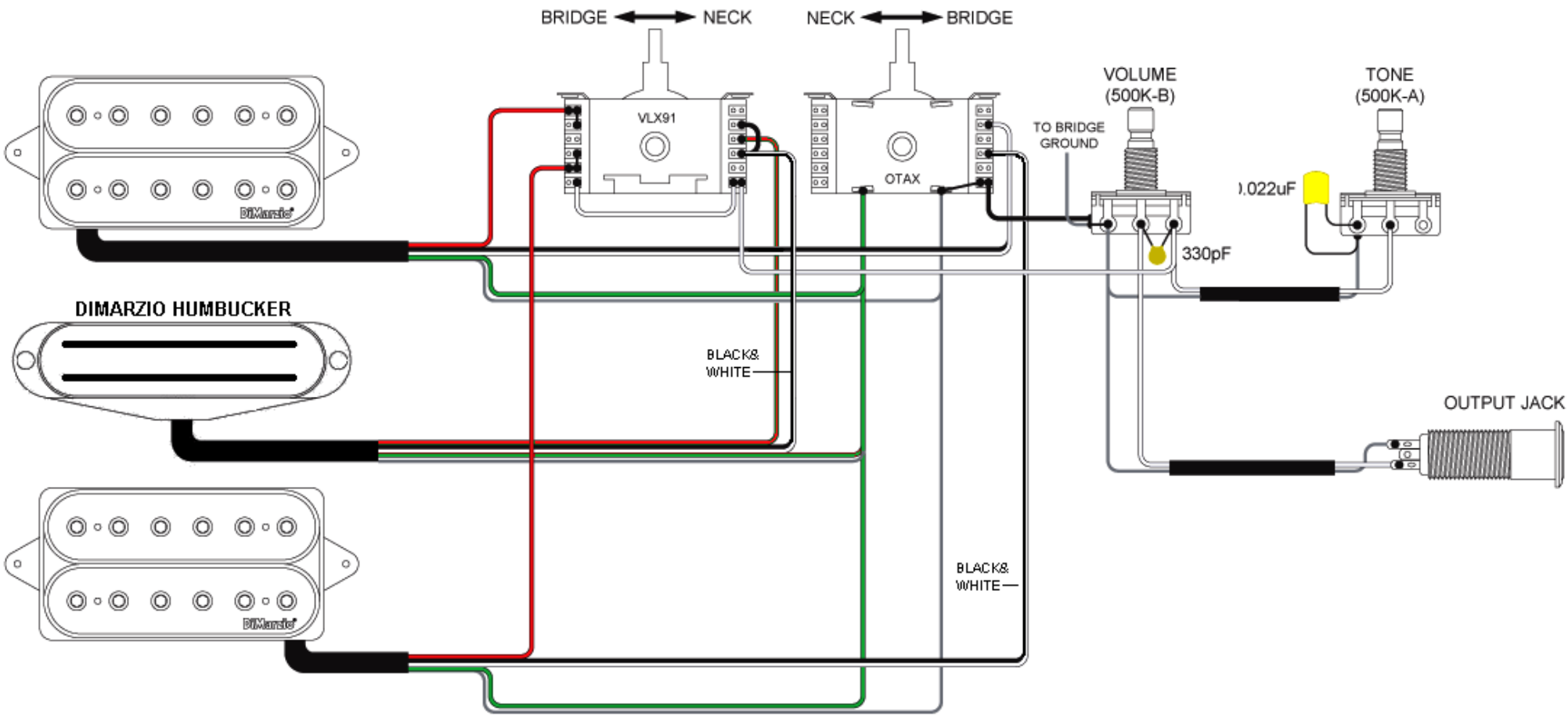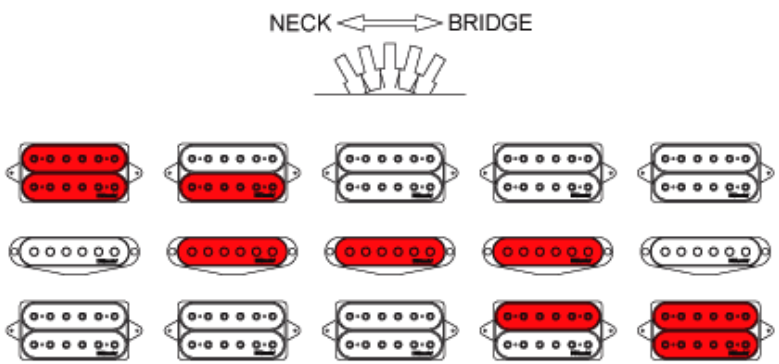2 DiMarzio humbuckers, 1 Fast Track (2 & 4 positions split HB & middle pickup)