DiMarzio, Inc.
1388 Richmond Terrace, PO Box 100387, Staten Island, NY 10310, Tel(718)981-9286, Fax(718)720-5296

3 VOL., 1 TONE WIRING

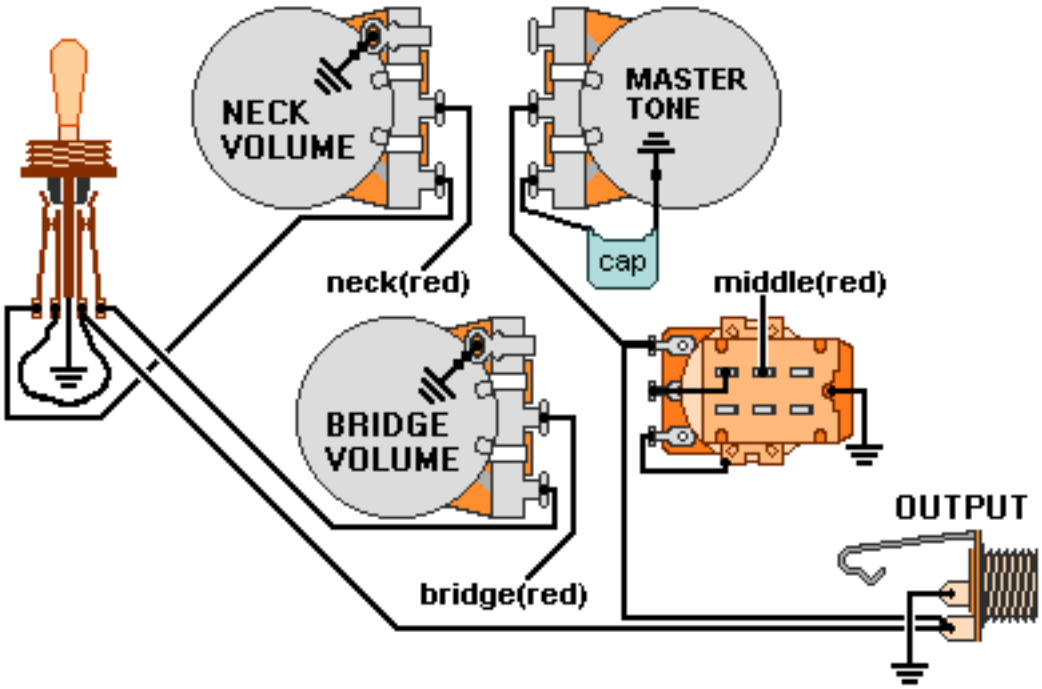

For each pickup, solder the black& white wire together and tape up the connection.

All other pickup wires not shown or mentioned go to ground.
Note: Tailpiece should be connected to common ground.
All grounds ⏚ must be connected.

Copyright (C) 2003 DiMarzio, Inc. All rights reserved