DiMarzio, Inc.
1388 Richmond Terrace, PO Box 100387, Staten Island, NY 10310, Tel(718)981-9286, Fax(718)720-5296

2 Humbuckers, 1 VV or HS Middle Position
2 & 4 coil-splitting
DPDT splits bridge pickup in position 5

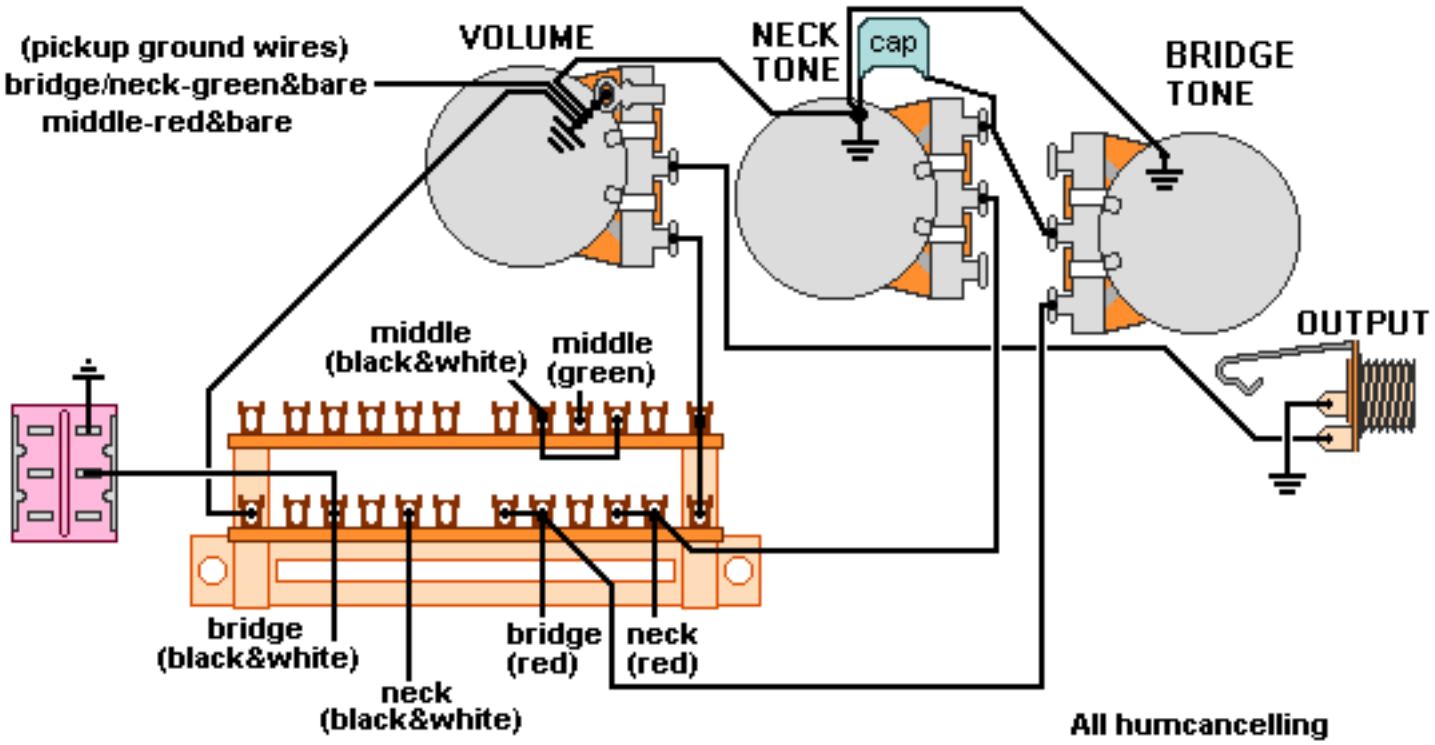

All humcancelling
1. neck
2. neck split & middle split
3. middle
4. bridge split & middle split
5. bridge

Note: Tailpiece should be connected to common ground.
All grounds ⏚ must be connected.

Copyright (C) 2003 DiMarzio, Inc. All rights reserved