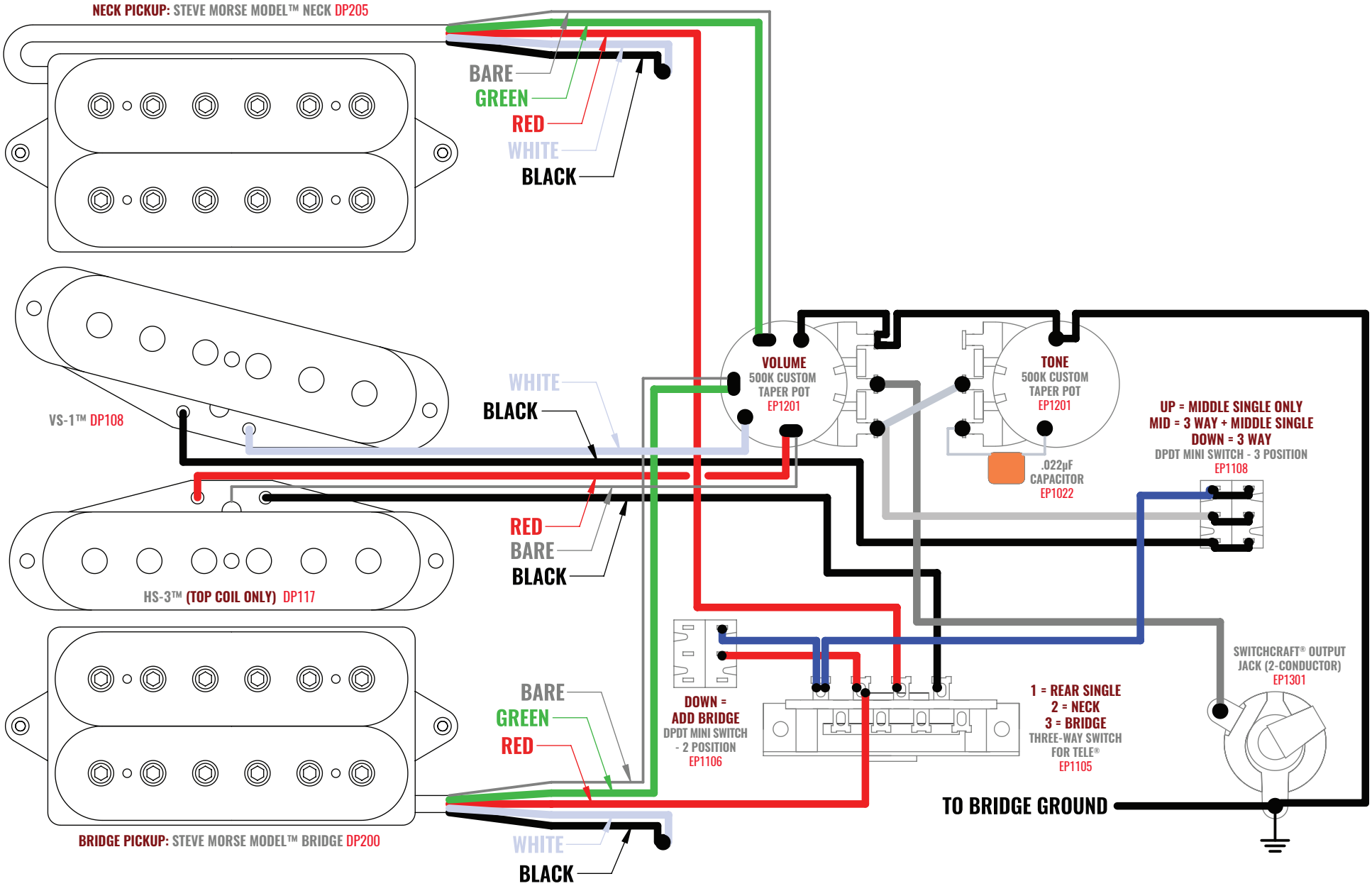

DiMarzio®
Wiring

Steve Morse Custom

Main Switch = 3 Way; **Rear DPDT Switch** = On/On/On; **Front DPDT Switch** = On/On.
Click products for more info.

DiMarzio, Inc. 1388 Richmond Terrace, PO Box 100387, Staten Island, NY 10310 • Tel. General: (718) 981-9286 • Toll Free: (800) 221-6468 • Tech Support: (718) 816-8112 • Email: tech@dimarzio.com • www.dimarzio.com

© 07/2026 All rights reserved. The information contained in this drawing is the sole property of DiMarzio, Inc. Any reproduction in part or as a whole without the written permission of DiMarzio, Inc. is prohibited.